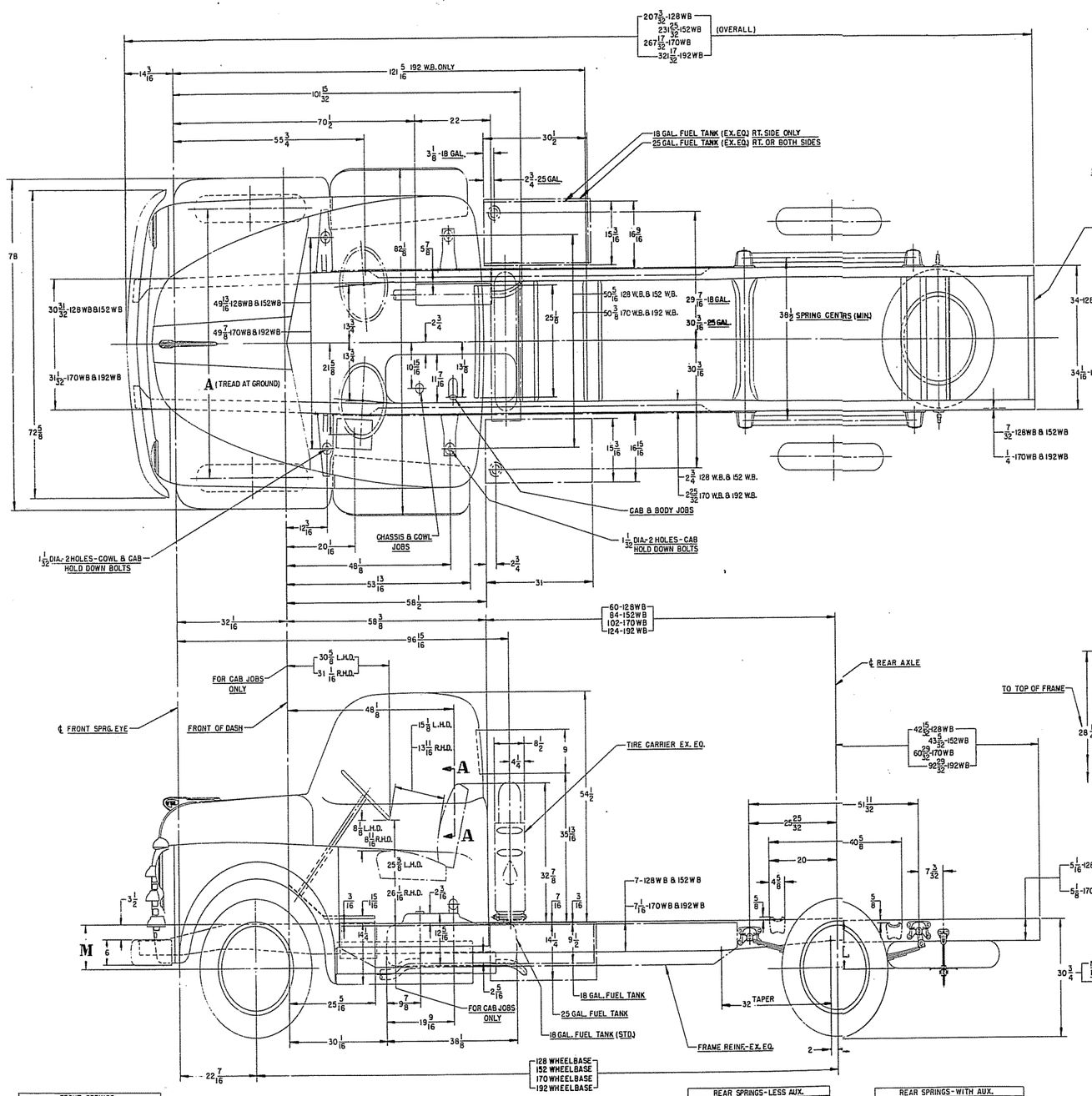

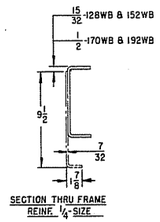

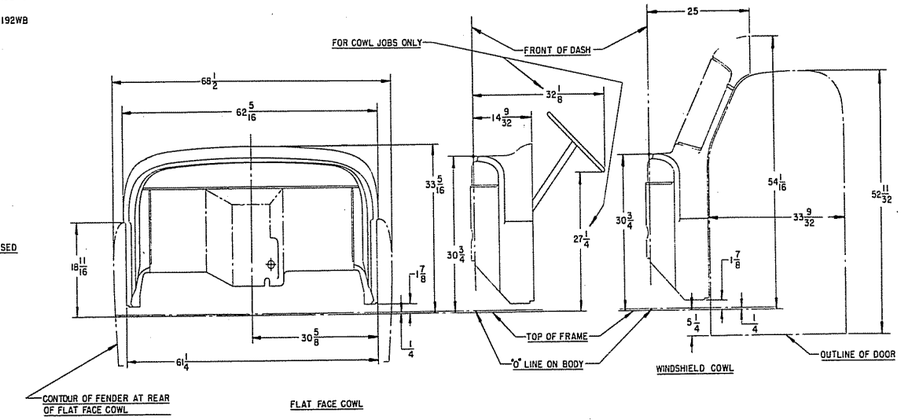

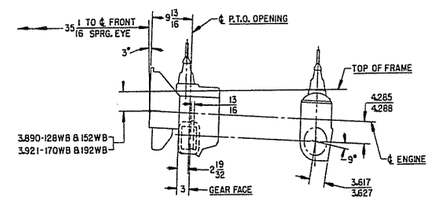

4 SPEED TRANS.
P.T.O. OPENING S.A.E. STD. LARGE ON R.H. SIDE
GEAR: TRANS. DRIVE 36T-7P-22 1/2° P.A.
SPEED RATIO: 3.95 R.P.M. TO 1000 R.P.M. (ENG.)
ROTATION: OPPOSITE ENGINE
ENGINE SPEED GOVERNED AT 3000 R.P.M.

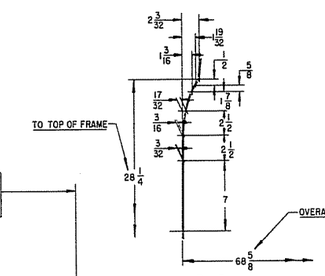

TIRE SIZE	RIM SIZE	A	B	C	D	E	F	G	H	J	K	P
6.00/20 6P.S.	20X5	63 1/2	—	—						—	—	
6.00/20 8P.S.	20X5	63 1/2	—	—						—	—	
6.50/20 6P.S.	20X5	63 1/2	55 9/16	24.28						10.00	16.12	
6.50/20 8P.S.	20X5	63 1/2	55 9/16	24.28						10.00	16.12	
7.00/20 8P.S.	20X5	63 1/2	55 9/16	24.03						10.73	16.90	
7.00/20 10P.S.	20X5	63 1/2	55 9/16	24.03						10.73	16.90	
7.50/20 8P.S.	20X6	62	62 5/16	26.96						11.28	17.42	
7.50/20 10P.S.	20X6	62	62 5/16	26.96						11.28	17.50	
8.25/20 10P.S.	20X6	—	62 5/16	26.69						11.93	18.07	
6.00/20 6P.D.	20X5				65 1/16	9 1/2	24.71	3.36	3	9.33	15.64	80.70
6.00/20 8P.D.	20X5				65 1/16	9 1/2	24.71	3.36	3	9.33	15.75	80.70
6.50/20 6P.D.	20X5				65 1/16	9 1/2	24.28	2.50	3	10.00	16.12	81.56
6.50/20 8P.D.	20X5				65 1/16	9 1/2	24.28	2.50	3	10.04	16.12	81.56
7.00/20 8P.D.	20X5				65 1/16	9 1/2	24.03	2.00	4	10.73	16.90	82.06
7.00/20 10P.D.	20X5				65 1/16	9 1/2	24.03	2.00	4	10.73	16.90	82.06
7.50/20 8P.D.	20X6				65 1/16	11	21.84	2.60	4	11.28	17.42	85.45
7.50/20 10P.D.	20X6				65 1/16	11	21.84	2.60	4	11.93	17.50	85.45
8.25/20 10P.D.	20X6				68 1/16	11	24.07	2.07	4	11.81	18.07	88.00

USED WITH EX. EQ. AXLES ONLY

NOTE: ABOVE CHART FOR HYPOID AXLE ON 14500# G.V.W.

FOR — 14500# G.V.W. 2-SPEED AXLE / 15500# G.V.W. 2-SPEED AXLE / 15500# G.V.W. HYPOID AXLE — ADD 3 TO D & P & ADD 1 1/2 TO F.

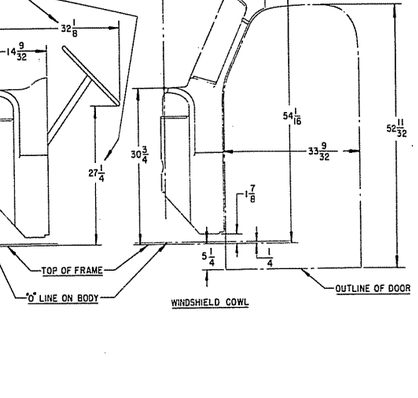

SECTION SHOWING REAR AXLE IN BUMP POSITION

FRONT SPRINGS			
M	LOAD LBS. PER SPRG.	RATE LBS. PER INCH	SPRING Nº
10 7/8	1300	517	1262731
11 1/4	1600	634	1262733
11 13/16	1900	742	1262735

REAR SPRINGS-LESS AUX.			
L	LOAD LBS. PER SPRG.	RATE LBS. PER INCH	SPRING Nº
11 5/8	2000	525	591655
12 1/8	3300	975	591654
12 1/8	3800	1125	591656
12 11/16	4500	1325	591657

REAR SPRINGS-WITH AUX.			
L	LOAD LBS. PER SPRG.	RATE LBS. PER INCH	SPRING Nº
11 5/8	3100 UP TO 1550	1830 325	591655 MAIN 915812 AUX.
12 1/8	4400 UP TO 2480	2280 975	591654 MAIN 915812 AUX.
12 1/8	4900 UP TO 2850	2430 1125	591656 MAIN 915812 AUX.
12 11/16	5600 UP TO 3380	2630 1325	591657 MAIN 915812 AUX.

F, FA
H, HA

BODY BUILDERS LAYOUT
F, FA, H, HA, 128", 152", 170", 192" W.B.